Rear view legislation- special transport Denmark.

BKG 1328 10/12/14

§ 36, stk.2

The driver of a transport with over wide cargo, must always have clear and unobstructed view rearwards to the horizon, on the outside of the cargo, in the longitudinal direction.

If the driver has no clear and unobstructed view rearwards to the horizon, there shall always drive a pilotcar behind the transport, beyond an eventually pilot in front of the special transport.

Furthermore, if the cargo is more than 2 m. wide from the centre line, in the longitudinal direction, there shall always drive a pilotcar behind the transport, beyond an eventually pilot in front of the special transport.

>>>

Clear and unobstructed view, can be obtained with rear view mirror extender or a camera solution.

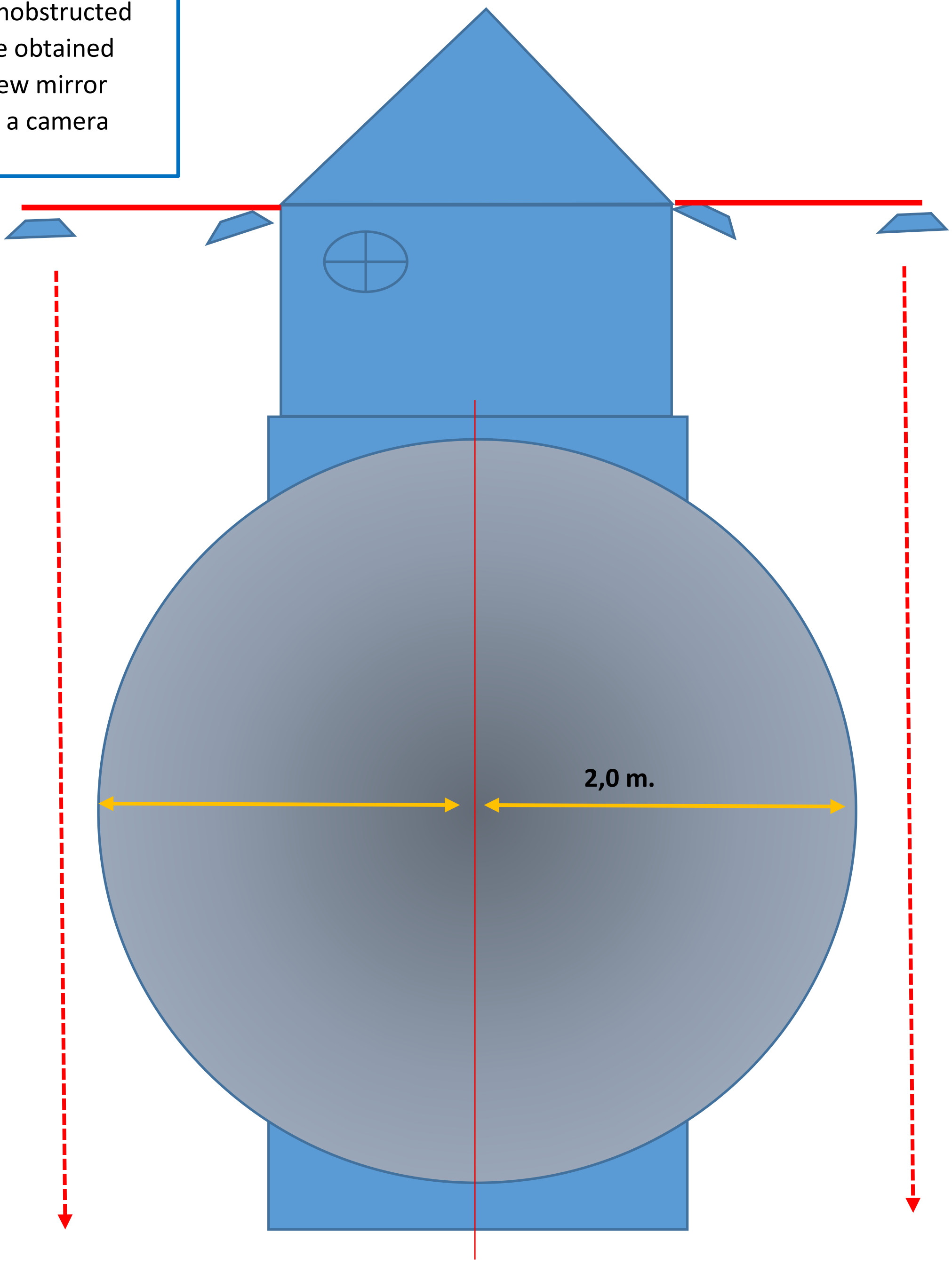

Mag Larsen Service ApS
info@ledsager-service.dk 26-10-16